CHESAPEAKE ENVIRONMENTAL PROTECTION ASSOCIATION, INC.
P.O. Box 117, Galesville, Maryland 20765

NEWSLETTER

Spring 2009

PRESIDENT'S MESSAGE

By Al Tucker, President, 2009

During the past quarter the Board of Trustees assessed and commented on the General Development Plan (GDP) for Anne Arundel County. Quite frankly, the plan is extremely weak on identifying limitations to development, anticipating problems of sprawl, solving current maintenance and infrastructure renewal backlogs, and enforcing adherence to the plan. And, above all it lacks a coherent strategy to fund the wish list outlined in the plan.

County staff prepared several background reports[1] that form an assessment of the present and the near term future in Anne Arundel County. Quite naturally, one would expect that a critical analysis of these reports would identify those issues directly impacting the quality of life. A high quality of life is the best economic insurance for the future for it attracts high value businesses providing a spectrum of well paying jobs. The GDP should be written first and foremost to protect the interests and welfare of all County citizens, not just special interests. There is a conflict between short-term interests versus long-term needs. Short-term interests invariably favor businesses and developers; they fuel the economy, provide tax revenue, and create jobs. The current revenue structure of the County government depends critically on growth (and as the current economic downturn shows, critical functions of government become impaired when growth stalls). Meeting short term goals hides the true costs to the citizens. When irreplaceable capital resources are consumed, namely land and water, the resources necessary for growth also are depleted. Then the costs of maintaining the common infrastructure will fall back on the residents of the County. Inevitably, if the infrastructure is not maintained, quality of life declines, people and businesses depart and the downward spiral accelerates, increasing an unsustainable burden on those that remain. Therefore, the question must be asked: at what point does the level of development in Anne Arundel County lead to an unsustainable future? More properly framed, the question should be stated positively: how does Anne Arundel County achieve a **sustainable economic, social, and environmentally sound future**?

This question is difficult to answer at a time when the apparent resources appear to be plentiful. Yet, there are clearly precursors that indicate it should be addressed now and not delayed. For example, how will we manage stormwater if the unfunded cost is $522M? What about vehicular infrastructure refurbishment if the current backlog is $122M? Where will the revenue come from? What happens when the remaining 26,000 buildable lots have been used? The GDP offers no critical analysis of these or other issues. For example, the background report on Sea Level Rise[1] seems to have had no influence on the GDP. That report indicates the County will lose significant amounts of low lying land and that several developed areas like the Shady Side Peninsula will be totally underwater. Climate change is often talked about as though it were a gradual slow process; the reality is that extreme events, such as storm surges, make abrupt changes. Anticipating land use patterns that will be affected by such events and planning for mitigating the impact on people should be a priority.

These issues seem disparate and yet they are interconnected economically, socially, and environmentally. They beg for analysis and for making decisions now to plan for the future.

Unfortunately, the GDP fails to face the criticality of these issues; instead it proposes a balanced plan for growth. I am afraid this is just a euphemism of giving something to everyone. All this does is delay the time for making the inevitable hard choices. If the time is delayed too long, we may face the prospect of never reaching a sustainable future in the County.

1. The General Development Plan and Background reports may be found on the Anne Arundel County website: http://www.aacounty.org/PlanZone/LongRange/GDP.cfm

IN THIS ISSUE:

******

Forum on Stream Restoration 2
Riverkeeper's Report 2
Geothermal Heat Pumps 3
Growing Green Lawn Care Program 4
Profile of a Trustee – Gary Antonides 5

CEPA BOARD OF TRUSTEES

FORUM ON STREAM RESTORATION

By Rich Romer

On Friday evening, February 27, 2009 CEPA held a forum on stream restoration at the Southern High School in Harwood. The forum was moderated by Rich Romer, a CEPA Trustee, and the speakers were Ron Bowen, Anne Arundel County Director of Public Works, Erik Mikelsen, Executive Director of the South River Federation, and Dr. Margaret Palmer, Director of the University of Maryland's Chesapeake Biological Laboratory at Solomons.

Ron Bowen pointed out that most of Anne Arundel County was developed years ago before the damaging effects of stormwater were properly accounted for and managed. Only in recent years have we have learned how to deal with stormwater and do so properly with respect to new construction. But that leaves the damage from hundreds of years of development. The damage to historic streams from stormwater runoff from our older developments needs to be retrofitted with effective stormwater management systems.

Bowen stated that all major Anne Arundel County waterways are now classified as impaired. A number of individual streams have been restored, such as Howard's Branch, at the Edgewater Elementary School, and at Shipley's Choice. However, the cost of restoring all the streams that need it and of correcting all the runoff problems is far beyond what the County can afford in the near future. Bowen admitted that the situation presents a bleak picture.

Impervious areas in Anne Arundel County cover 17% of our land, and that amount of impervious surface is known to create problems with respect to water quality, particularly in reducing wildlife diversity. The County Council is considering legislation which would require enhanced nitrogen removal systems for new septic tanks in the County, which will reduce nitrogen flow into the Bay If we are to get our rivers off the impaired list, we also need to change our behavior with respect to fertilizing our lawns, using rain barrels and rain gardens, etc.

Even using proper stormwater management practices with new construction, Bowen estimates that after the County is built out, 95% of runoff pollution will come from existing development, emphasizing the need for retrofitting older stormwater management systems.

In order to understand the present status of our streams, Erik Michelsen talked about man's influences throughout our history. In 1608, before we altered the land, there were many beaver dams to slow streams down and allow the water to seep back into the ground. Early settlers constructed many mill dams, which also slowed down the streams, but which caused silt to accumulate behind the dams. As the dams were removed or allowed to deteriorate, the streams eroded a path through the silt, often several meters thick, and left steep banks without any vegetation. For many years, as development occurred, developers felt the best way to "restore" streams was to channel them to get water to rivers or bays as directly as possible. With no chance for the water to soak into the ground, this increased the amount of agricultural sediment and pollution from runoff which flowed directly into the rivers and bays.

Now we are aware of a number of techniques that slow down streams, using a series of pools, for example, which allow the water to soak in. Also, sand filters can be used between pools. The Wilelinor development at the intersection of Aris T. Allen and Southern Maryland Boulevards (MD Routes 665 and 2) is a good example of new restoration techniques. Mikelsen reported that the South River Federation plans some stream restoration work in Church Creek, with help from grants.

Some studies suggest that water quality is significantly affected when impervious surface in the watershed reaches about 10%. However, Margaret Palmer pointed out that there is no abrupt decrease in wildlife at that point. Some species can tolerate more and some less.

She explained that some past stream restoration projects attempted to recreate the conditions that used to be present. Often that is difficult, and often that is not the best way to restore streams. Enough conclusive studies have been made that the results of those studies should guide how restoration is done. That would definitely include such things as step pools and wetlands. Studies also indicate that restoration doesn't necessarily mean that biodiversity will rebound.

Dr. Palmer feels the single most effective way to reduce runoff and pollution for a reasonable cost is to preserve forests and plant trees, particularly in the buffer areas adjacent to streams and the Bay. Often, large sums of money are spent on very effective stream restoration, but she feels the same amount of money would be far more effective if it were reallocated to preserving and planting trees.

WEST/RHODE RIVERKEEPER'S REPORT

By Chris Trumbauer

On April 4, we released our West and Rhode Rivers Report Card. The Report Card is our summary of the current health of the rivers. We worked hard to make sure it is both scientifically credible, and easy to understand. Most of our indicators received poor grades, including a few failing ones. Fish kills, algae blooms, and murky water are all symptoms of the poor water quality in the rivers. The key questions are "What is causing these problems?" and "How do we fix them?" Neither question is easy to answer.

Fortunately we have a world-class research institution in our own backyard—the Smithsonian Environmental Research Center. As a result, Rhode River is among the most studied tidal rivers on the planet. Their research has shown that what we do in our watershed, with regard to land use, shoreline protection, etc., does make a difference. But their research also shows that much of the nutrient pollution that is causing problems in our rivers is brought in with the tides from sources in other parts of the Chesapeake Bay watershed.

This underscores the fact that we need to work both locally and regionally if we are going to improve the conditions of our rivers. It's also why we spend time advocating for environmental issues on the county, state, and even federal level. Scientists, academics, and even politicians have been telling us this is a critical point for the Chesapeake Bay and the West and Rhode Rivers. We need to seize this opportunity of increased awareness to start implementing the changes that will make a difference.

In order to do that, we are all going to have to take personal responsibility to make a difference. Remember that what we do on land affects the health of our water. Plant a tree, replace your bulkhead with a living shoreline, stop fertilizing your lawn more than necessary – these are things that will help our rivers. And we can't do it all alone because our rivers are not in a vacuum. We're connected to the Bay, so spread the word to friends in other parts of the Bay area.

We all need to work together to bring our rivers back from the tipping point. (You can view our report card on our website: www.westrhoderiverkeeper.org).

GEOTHERMAL HEAT PUMPS COME WITH GREAT INCENTIVES

By Gary Antonides

The high price of oil and gas, the need to reduce our carbon footprint, and the need to become energy independent are all reasons that geothermal heat pumps will become more and more common in the future. The generous incentives offered by Maryland and the federal government will accelerate that process.

Wikipedia defines a **geothermal heat pump** system as a central heating and/or air conditioning system that actively pumps heat to or from the shallow ground. It uses the earth as a source of heat in the winter or as a coolant in the summer. Geothermal heat pumps are also known as **ground-source heat pumps**. This may be more descriptive because in most cases the heat does not originate from geological sources where volcanic activity comes close to the surface. Instead, it simply comes from shallow ground. Like a refrigerator or air conditioner, these systems use a heat pump to force the transfer of heat. Heat pumps can capture heat from a cool area and transfer it to a warm area, against the natural direction of flow. In the summer, the heat is moved from inside of our houses to the ground, and in winter, the heat is moved from the ground to our houses. The core of the heat pump is a loop of refrigerant pumped through a vapor-compression refrigeration cycle that moves the heat.

Most heat pumps are **air-source heat pumps**, which extract or exhaust heat to or from the outside air. A ground-source heat pump, by exchanging heat with the ground is much more efficient because underground temperatures are relatively stable through the year, ranging from about 45 to 55 degrees in this area. In the winter, it is much easier to extract heat from the ground at 50 degrees than it is from the air which is likely to be significantly colder. In summer, it is much easier to exhaust heat into the ground at 50 degrees than into the air which much of the time will be 80 degrees or more.

A ground-source system costs about twice what a conventional air-source system costs, but it may use about half the electrical power and the difference in original cost is usually returned in energy savings in 3–10 years. It also costs considerably less for maintenance and increases the value of your house. These systems have proven to be very reliable. Life is estimated at 25 years for the inside components and 50+ years for the necessary ground loops. As of 2004, there are over a million units installed worldwide, with an annual growth rate of 10%.

A common objection to air-source heat pumps is that the air is heated only to about 80 degrees in the winter, so the system has to move a lot of air to keep the house warm, prompting complaints about drafts. A ground-source heat pump can heat the air to about 110 degrees and doesn't need to move as much air.

Most ground-source heat pump systems are closed loop systems and have two loops. The primary refrigerant loop is contained in the appliance cabinet where it exchanges heat with a secondary water loop that is buried underground. Often, split units are used in which the air handler is separate from the compressor unit and, in those cases, the refrigerant loop runs between the two. In a closed loop system, the secondary loop is typically made of high-density polyethylene pipe and contains a mixture of water and anti-freeze. After leaving the internal heat exchanger (in the compressor unit), the water flows through the secondary loop outside the building to exchange heat with the ground before returning. The secondary loop is placed below the frost line where the temperature is more stable.

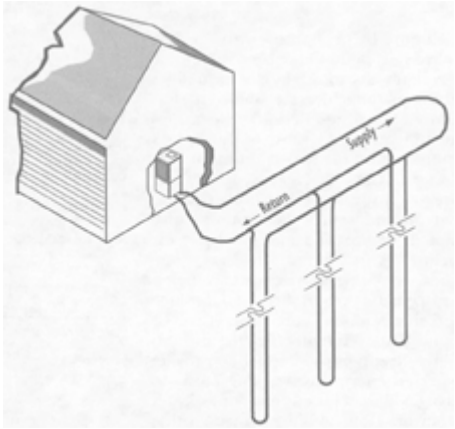

Figure 1. Typical vertical ground loop. Vertical bores cost more, but take up less space than horizontal trenches.

Closed loop tubing can be installed horizontally in trenches or vertically as long U-shapes in wells. A vertical closed loop field is composed of pipes installed in holes similar to those for water wells. The holes are typically 75 to 500 feet deep. Pipe pairs in the hole are joined with a U-shaped cross connector at the bottom of the hole. The borehole is commonly filled with a bentonite grout surrounding the pipe to provide a good thermal connection to the surrounding soil or rock to maximize the heat transfer. Bore holes are spaced 15 to 20 feet apart and the depth depends on ground and building characteristics. For illustration, in this area, a house needing 10kW (3 tons) of heating capacity might use 3 boreholes, each about 200 feet deep.

A horizontal closed loop field is composed of pipes that run horizontally in the ground. A long horizontal trench, deeper than the frost line, is dug and U-shaped pipes or coils are placed horizontally inside the trench. Horizontal loop fields are more common (and more economical) if there is adequate land available, or for new construction where the lawn is not yet established.

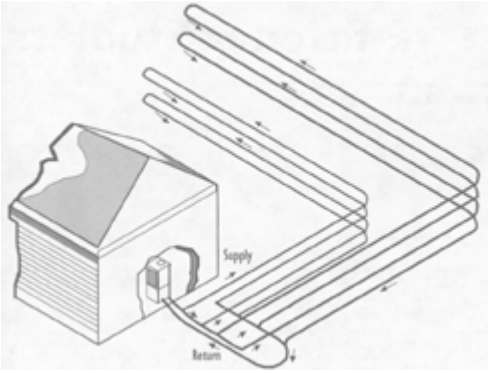

Figure 2. Typical horizontal ground loop.

According to the U.S. Environmental Protection Agency, geothermal systems save homeowners 30-70 percent in heating costs, and 20-50 percent in cooling costs, compared to conventional systems. (These numbers will vary considerably since gas and oil prices vary so much. The percentages are probably in the middle of these ranges when comparing to air-source heat pumps.)

For further savings, ground-source heat pumps equipped with a device called a desuperheater can heat the household water. In the summer cooling period, the heat that is taken from the house is used to heat the water for free. In the winter, water heating costs are reduced by about half.

If you are buying a new house, and can include the cost of a ground-source heat pump in a mortgage, it will usually result in a positive cash flow from the beginning. The energy cost savings will exceed the difference in the mortgage payment.

There are both Federal and Maryland state incentives for geothermal heat pumps. My research indicates that you can apply for a grant from the Maryland Geothermal Heat Pump Grant Program. They will pay $1,000. per ton up to $3,000. for residential units ($10,000. for businesses). Unfortunately, the number of grants is limited, but they are taking applications for a FY 2010 waitlist, and the Maryland Energy Administration anticipates funding all waitlisted applications from new funds that will be made available by the Regional Greenhouse Gas Initiative. An application must be accompanied by a signed cost estimate, purchase order, invoice, or letter of intent as well as an itemized list of components and site plan. The proposed installation must meet specified efficiency ratings. The program seems to be changing as time goes on and the pertinent web sites may not be keeping up with the changes. For details, go to www.energy.maryland.gov/incentives/residential/geothermalgrant on the web, email meainfo@energy.state.md.us, or call 1-800-723-6374.

Federal incentives are provided in the form of a tax credit equal to 30% of the cost of a residential geothermal heat pump unit. If the credit exceeds the tax liability for the year, the excess amount can be carried forward to the next year. The unit must meet federal Energy Star requirements. For further information, go to the above website and click on Federal Tax Incentives for Renewable Energy half way down the page.

As an example, the incentives, as I interpret them, would pay for more than 40% of a geothermal unit for my house, which could replace my 20 year old air conditioner/heat pump unit. With the incentives, I think the additional cost (compared to an air-source unit) should be recouped in less than two years. I have contracted to have one installed, and will report on the outcome (and any surprises) in a future newsletter.

GROWING GREEN LAWN CARE PROGRAM

It is common knowledge that fertilizers and other things we put on our lawns are a significant source of pollution in our rivers and the Bay. More than a year ago, Frank Gouin, a University of Maryland professor and author of the *Bay Weekly's* Bay Gardener column, gave a presentation to West/Rhode Riverkeeper members about his simple method for maintaining a healthy lawn that is also healthy for the rivers. W/RR members who care for their own lawns have used Frank's method with success.

But, those who use lawn care companies have asked us how they can be sure that their lawn care company does it right. Now we have an answer—the **West/Rhode Riverkeeper Growing Green Lawn Care Program.**

The Bay Gardener's method has been boiled down to ten common sense principles. The principles are set forth in a one-page PLEDGE. It is shown on page 5 and can be printed out from http://westrhoderiverkeeper.org/growing_green.shtml. If you call 410.867.7171, they can send it to you. Then, ask your lawn care company to sign the PLEDGE.

If you click the same link or call their office, they will give you the names of several lawn care companies who have agreed to provide the PLEDGE to their customers. If you care for your own lawn, you can follow the principles set out in the PLEDGE.

Please let W/WR know how your lawn care company responds. If they cooperate, they will be added to the list. If you believe that a company that has given the PLEDGE is failing to live up to it, please report that as well.

If you let W/WR know that you have adopted the program, they will send you a small, attractive yard sign that will let your neighbors know that you care about our rivers.

West RIVERKEEPER,® INC.

Growing Green Pledge

We want a healthy lawn and healthy waterways.

_____ (Contractor) pledges to _____ (Owner) that any lawn care services rendered to Owner by Contractor or his affiliates or subcontractors will be rendered in compliance with these commonsense conditions:

- ☑ Lawn shall not be mowed shorter than 3½ inches.
- ☑ Lawn clippings will be left on the lawn.
- ☑ No lime or fertilizer shall be applied, except as indicated by a soil test taken within one year of the proposed application.
- ☑ Only slow-release, organic fertilizers shall be used. Fertilizers must be composed of at least 65% slow-release nitrogen. Recommended fertilizers include: chicken waste, compost, and milorganite.
- ☑ Fertilizer shall be applied only once per year in the fall for cool season grasses and four times per year for warm season grasses. No more than 1 pound of fertilizer per 1,000 square feet may be applied per year.
- ☑ When spreading fertilizer, the application must target the lawn. No fertilizer may get on impervious surfaces.
- ☑ To combat pests, Integrated Pest Management will be used, beginning with over-seeding and core aeration. Pesticides shall be used only as a last resort after specific pests have been identified. Only natural remedies such as Milky Spore shall be used for general application. Other treatments will be used only on a spot-treatment basis.
- ☑ Only corn gluten meal products may be used for pre-emergent weed prevention. Other herbicides shall not be used for general application and may be used only on a spot-treatment basis. (If applying fertilizer later in the season, the nitrogen in corn gluten meal must be taken into account, therefore lowering the amount of nitrogen needed later in the season.)
- ☑ Lawns with water access to the Bay, rivers, creeks, etc. must maintain a 6-foot minimum NO PESTICIDE/NO FERTILIZER ZONE at the water edge of the property.
- ☑ Fertilizer and pesticides will not be used within 12 hours of a predicted rain event.

Contractor _____ Date _____ Owner _____ Date _____

PROFILE OF A TRUSTEE

Gary Antonides

Gary was born in Pensacola, Florida, the son of a Navy pilot who moved often while Gary was growing up. Gary went to the Naval Academy, spent four years on sea duty and two as a math instructor at the Academy before becoming a civil servant, working at the Naval Ship R&D Center, dealing mostly with ship vibration. While employed there, he earned a masters degree in Engineering Mechanics from Catholic University. He then worked for a defense contractor, and finally as a consultant before he retired. His last major efforts before retiring were working for the Navy and Coast Guard writing a new set of vibration specifications for ships. As a member of 4 different panels of the American National Standards Institute and the Society of Naval Architects and Marine Engineers he worked on their modification and approval as industry standards.

Gary has been involved as a volunteer in a number of organizations and has held various offices in the community. The organizations include the Boy Scouts, his church, his community recreation center (swimming pool), in Herndon, VA, and, since moving to Edgewater in 1980, the Loch Haven Civic Association and the Annapolis Sail & Power Squadron as well as CEPA. He was involved in various environmental issues while on the Board of the Loch Haven Civic Association, including those associated with the building of the Mayo Peninsula wastewater system.

He became a Trustee of CEPA in 1998 and has served as President and Vice-President, and is still very involved with many of the issues CEPA is addressing. His primary role with CEPA now is being the editor of this newsletter.

His main avocation is boating, and, for him, boating means taking a trailerable, trawler type cruising boat to new (to him) rivers, lakes, and coastal areas and exploring those areas and the history associated with them. Various friends and family serve as crew. Next on his list are the Apostle Islands

in the western part of Lake Superior and the Upper Mississippi River.

TO GET ON CEPA'S MAILING LIST:

CEPA distributes its newsletter primarily by electronic means, but if you prefer to get it by mail, just let us know. Either way, contact Gary Antonides (garyanto@verizon.net). Newsletters are posted on www.cepaonline.org in pdf files. When a new newsletter is available, we send emails with a direct link to it.

2009 CEPA MEMBERSHIP and/or RIVERKEEPER CONTRIBUTION

A CEPA membership entitles you to receive our newsletter and to vote for our Trustees.

We also provide you the opportunity to support the West/Rhode River Riverkeeper. Those donations go directly to that organization.

Mail to: CEPA, PO Box 117, Galesville, MD 20765

Name_____

Address_____

_____

Phone_____

Email_____

Enclosed is: [ ] $30. for my CEPA membership

[ ] $50. for my Sponsoring CEPA membership

[ ] $100. for my Sustaining CEPA membership

[ ] $_____for the West/Rhode Riverkeeper.

[ ] Please send me an email when the newsletter is posted.

[ ] Please send copies of the newsletters to me by mail.

CEPA
P.O. Box 117
Galesville, MD 20765